NOTES: Unless otherwise specified.

1. Machined surfaces ⊥ .001 in 12" // .002 in 12" ▱ .001 in 12"
2. Deburr and break all sharp edges.

THE INFORMATION CONTAINED IN THIS DRAWING IS THE SOLE PROPERTY OF ABBOTT WORKHOLDING PRODUCTS. ANY REPRODUCTION IN PART OR WHOLE WITHOUT THE WRITTEN PERMISSION OF ABBOTT WORKHOLDING PRODUCTS IS PROHIBITED.

Includes H916TP Top Plate And (2) Lifting Rings Installed

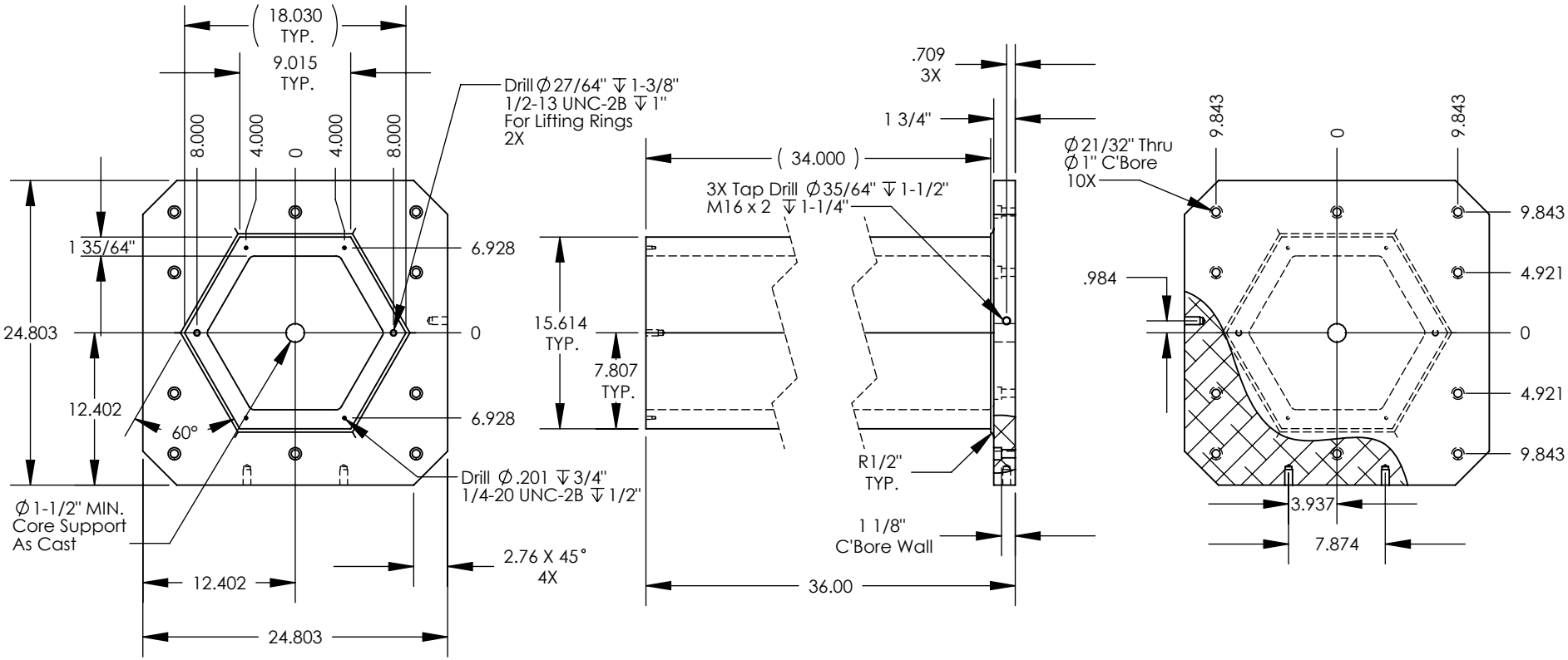

UNLESS OTHERWISE SPECIFIED DIMENSIONS ARE IN INCHES TOLERANCES ARE: FRACTIONS ±1/32 DECIMALS .XX ± .015 .XXX ± .005 .XXXX ± .0005 ANGLES ± 5°	**Abbott Workholding Products** 430 McCall Road Manhattan, KS 66502 785-776-8555 785-587-0004 Fax 800-528-6459 www.abbottworkholding.com engineering@abbottworkholding.com			
DRAWN TBJ	DATE 01/28/19			
MATERIAL 713	WEIGHT(POUNDS) 370.1			
STYLE TC	DISPOSITION Released	CUSTOMER: Stock	SIZE A	Part Name H93616-630JIS	REV. --