THE INFORMATION CONTAINED IN THIS DRAWING IS THE SOLE PROPERTY OF ABBOTT WORKHOLDING PRODUCTS. ANY REPRODUCTION IN PART OR WHOLE WITHOUT THE WRITTEN PERMISSION OF ABBOTT WORKHOLDING PRODUCTS IS PROHIBITED.

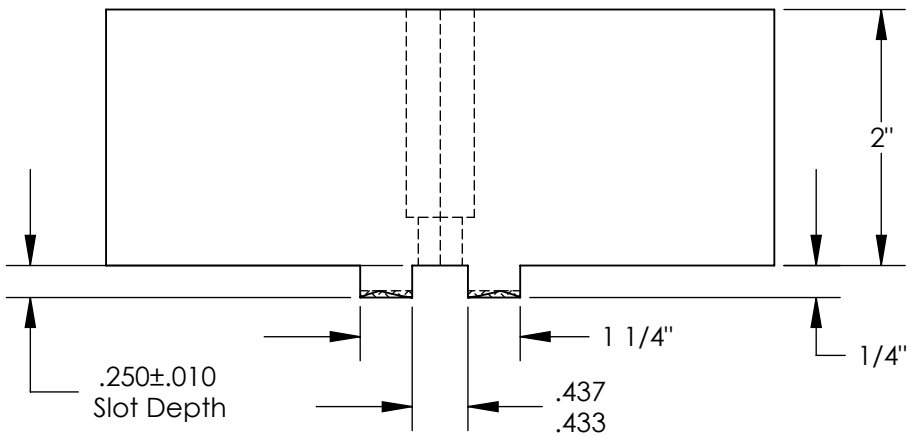

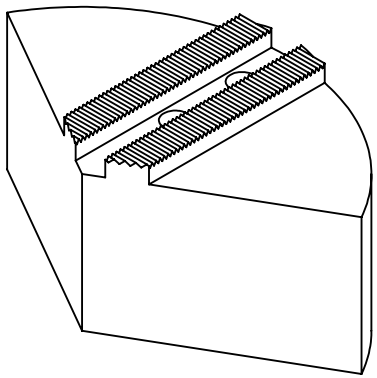

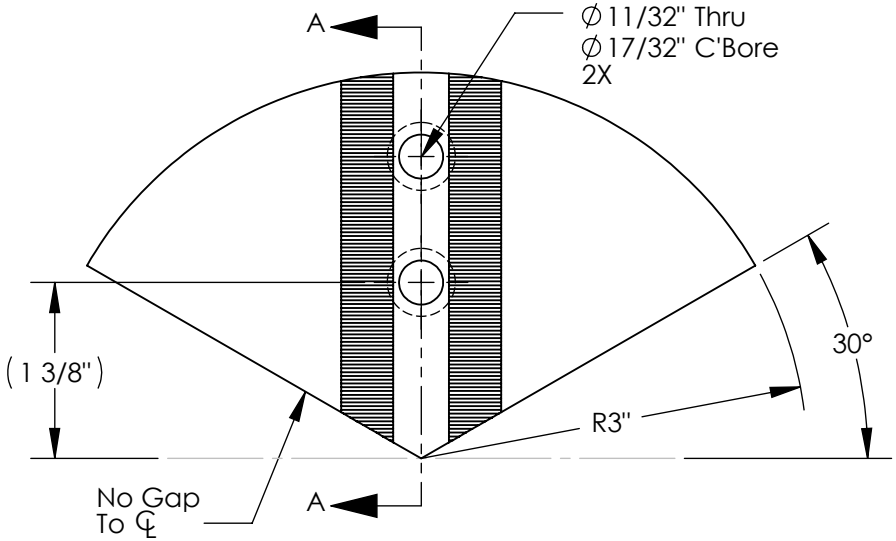

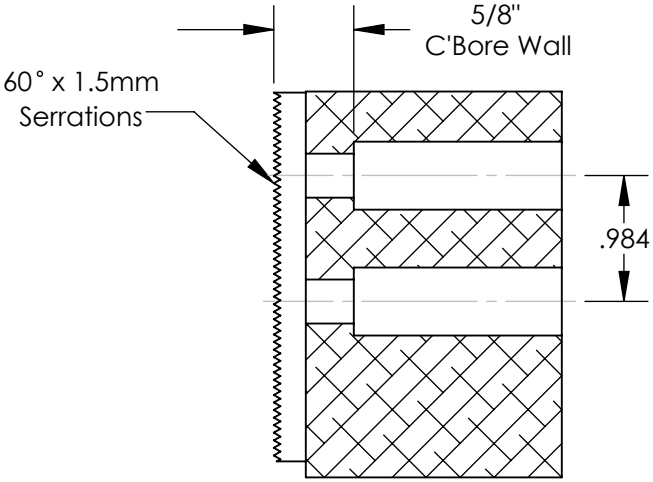

SECTION A-A

UNLESS OTHERWISE SPECIFIED DIMENSIONS ARE IN INCHES TOLERANCES ARE: FRACTIONS ±1/32 DECIMALS .XX ± .015 .XXX ± .005 .XXXX ± .0005 ANGLES ± 5°	**Abbott Workholding Products** 430 McCall Road Manhattan, KS 66502 785-776-8555 785-587-0004 Fax 800-528-6459 www.abbottworkholding.com engineering@abbottworkholding.com			
DRAWN ZGG	DATE 07/08/16			
MATERIAL 6061	WEIGHT(POUNDS) 1.9			
STYLE Q	DISPOSITION Released	CUSTOMER: Stock	SIZE A	Part Name SUG6PSTS	REV. A